Lily Ann Cabinets

http://www.lilyanncabinets.com/

Installation Instructions

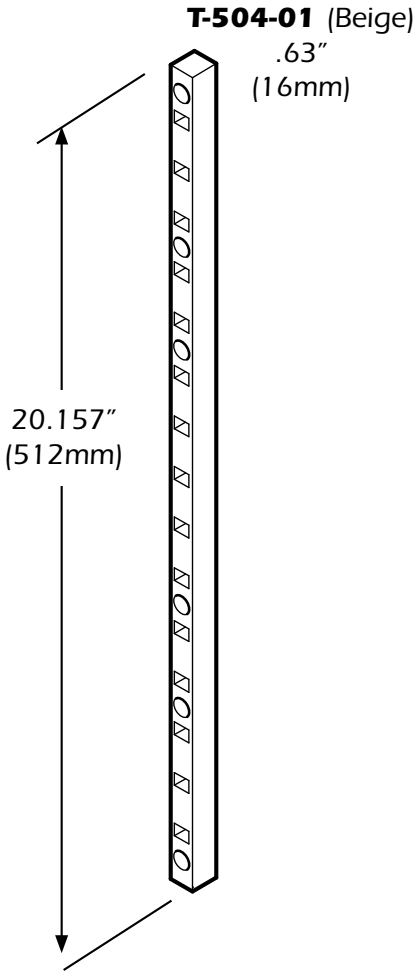

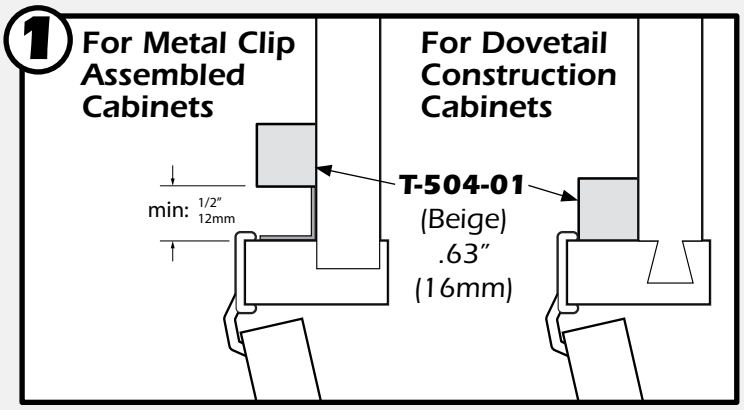

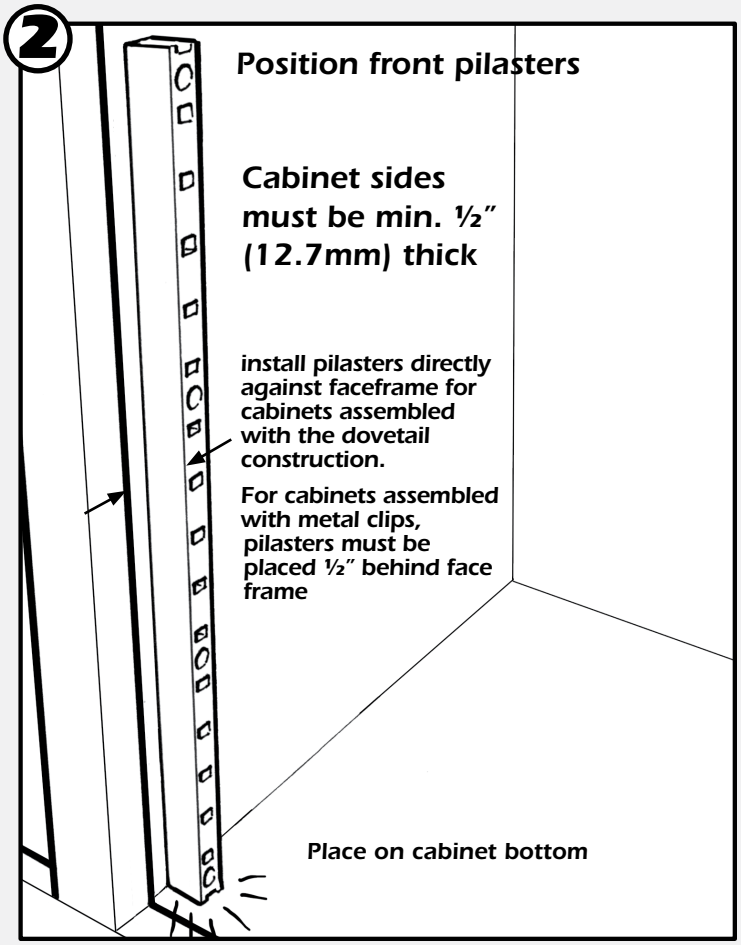

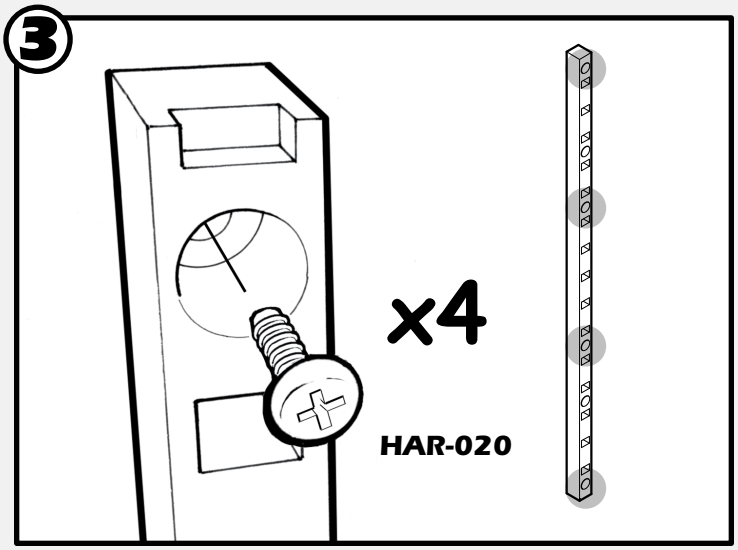

4

Remove the drawer member from the slide.

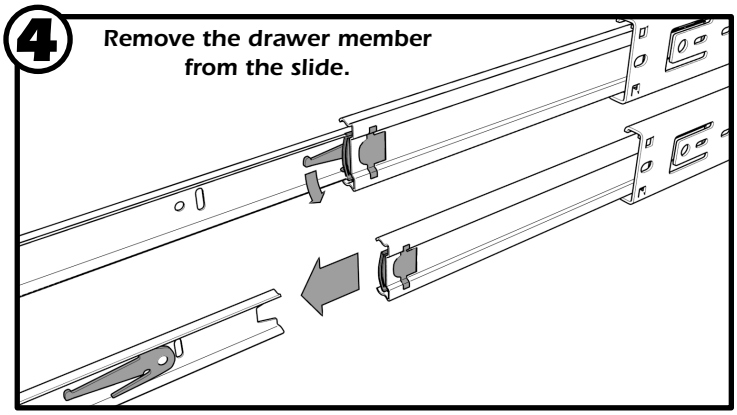

4a

Locate the first and last holes for mounting the Hook Dowels and Spacers.

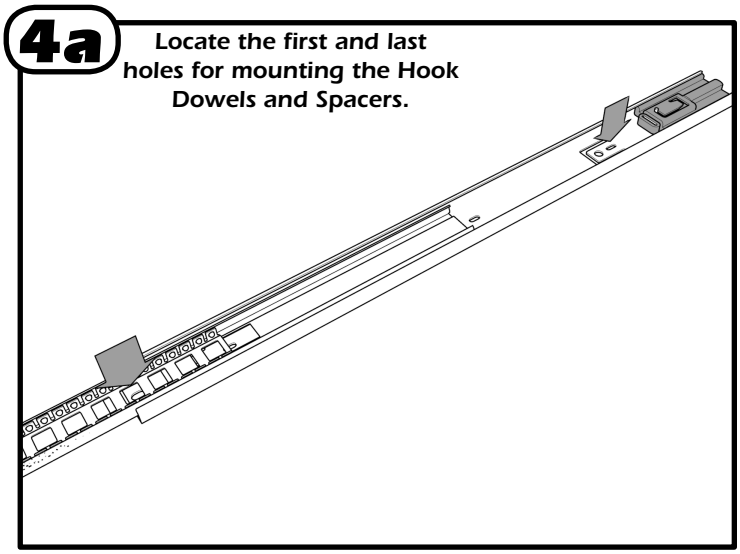

4b

Attach T-506 Hook Dowel with hook pointing up, with Spacer.

Left and right sides will be opposite.

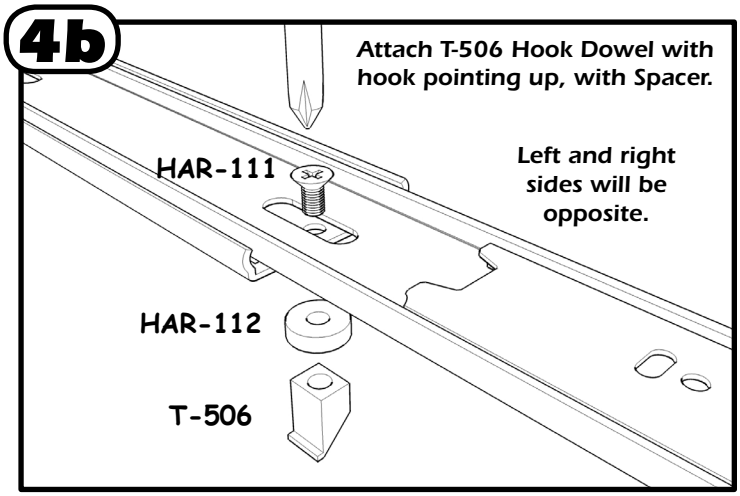

4c

Use Pilaster to help straighten and tighten Hook Dowels.

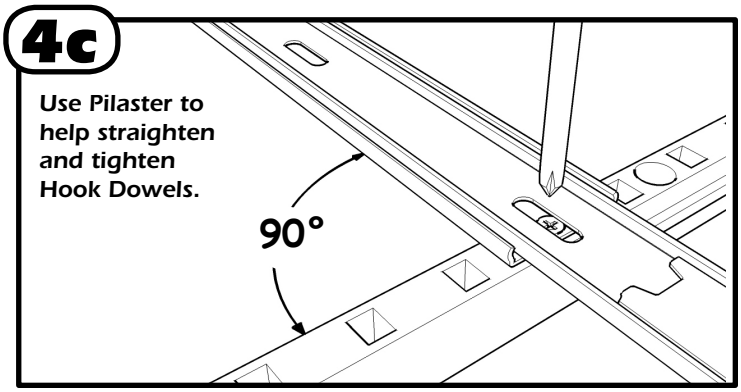

5

Insert Hook Dowels into front and Rear Pilaster. Using both slides, the Rear Pilaster can be attached. This will align the slides to the cabinet.

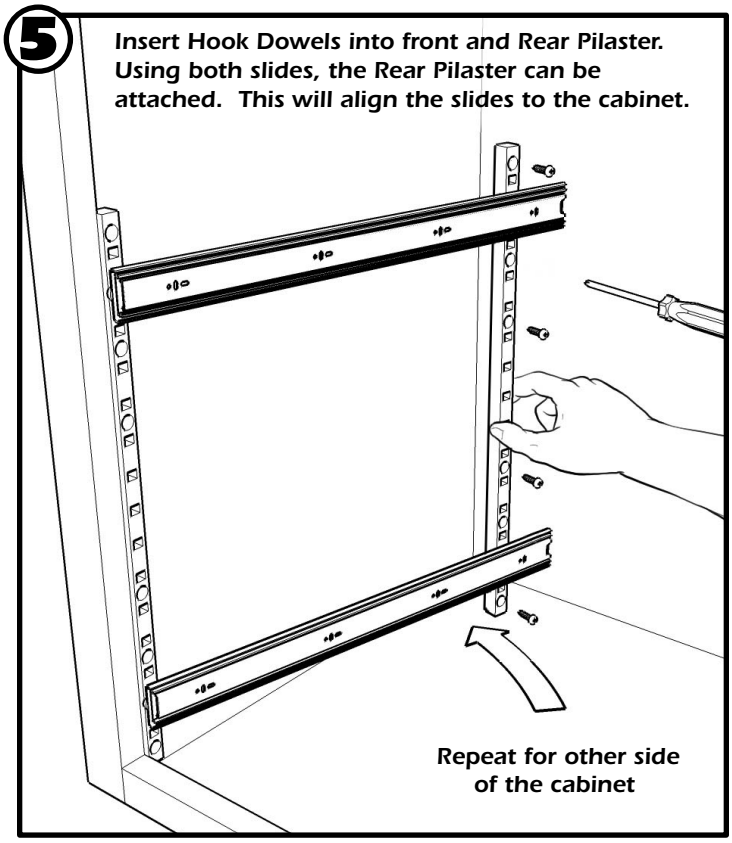

Repeat for other side of the cabinet

6

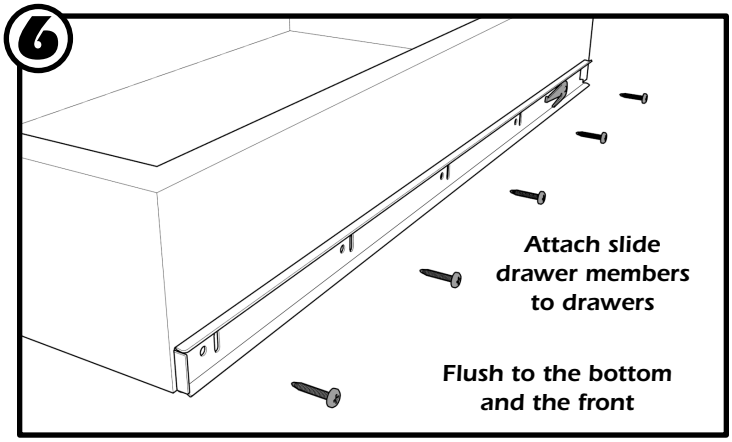

Attach slide drawer members to drawers

Flush to the bottom and the front

7
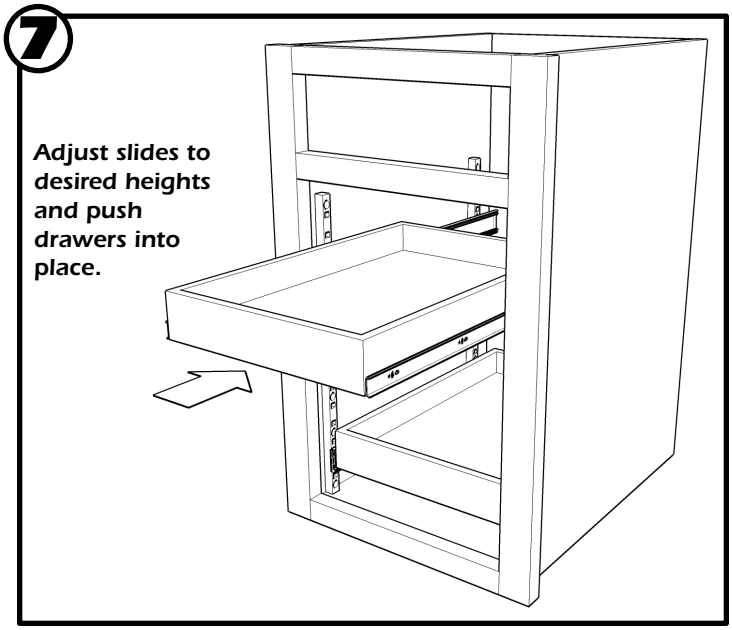
Adjust slides to desired heights and push drawers into place.